PRACTICAL 85 / S

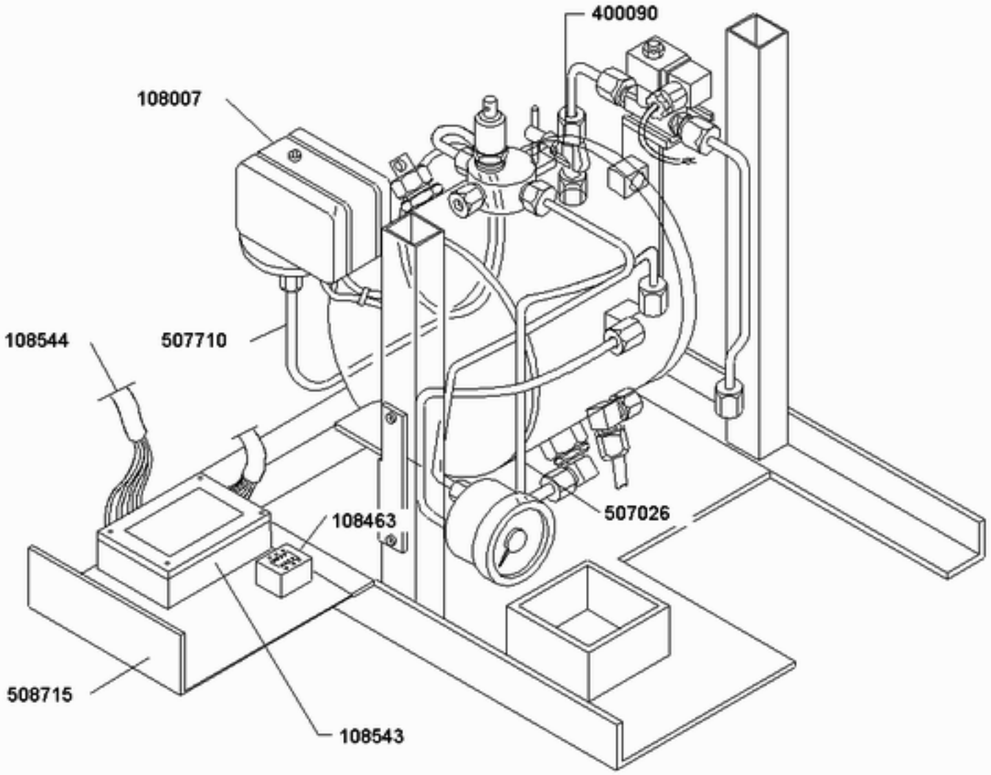

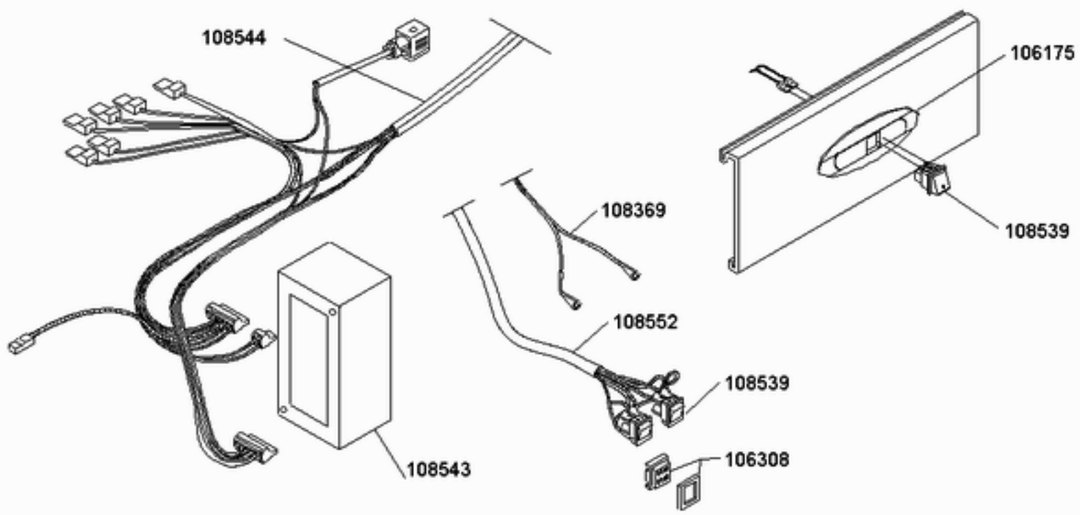
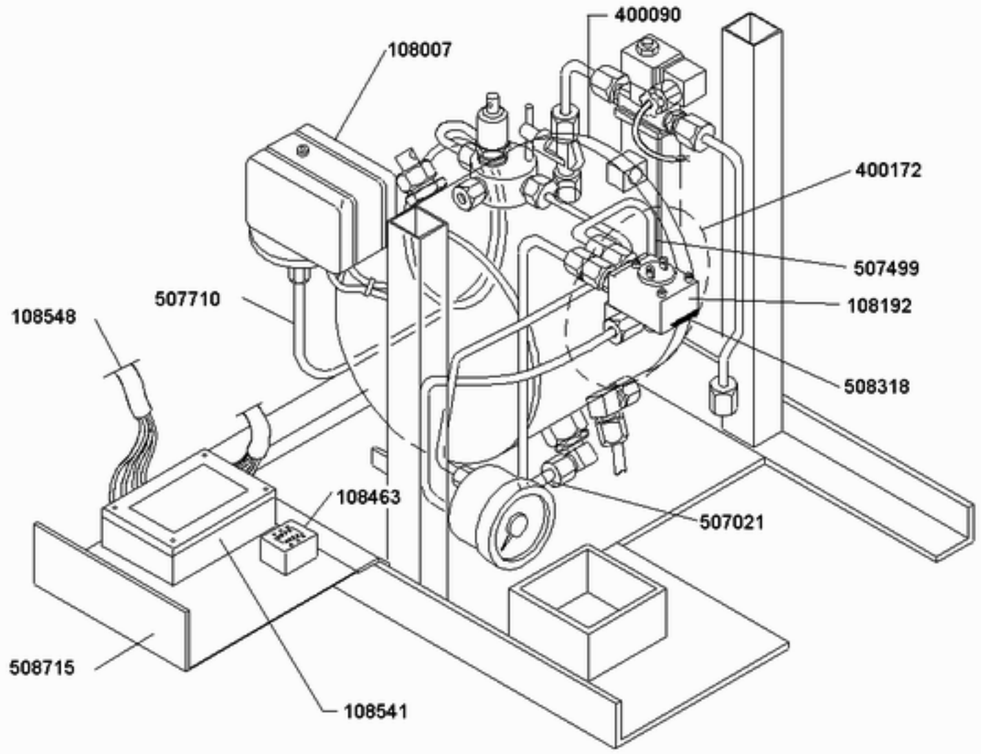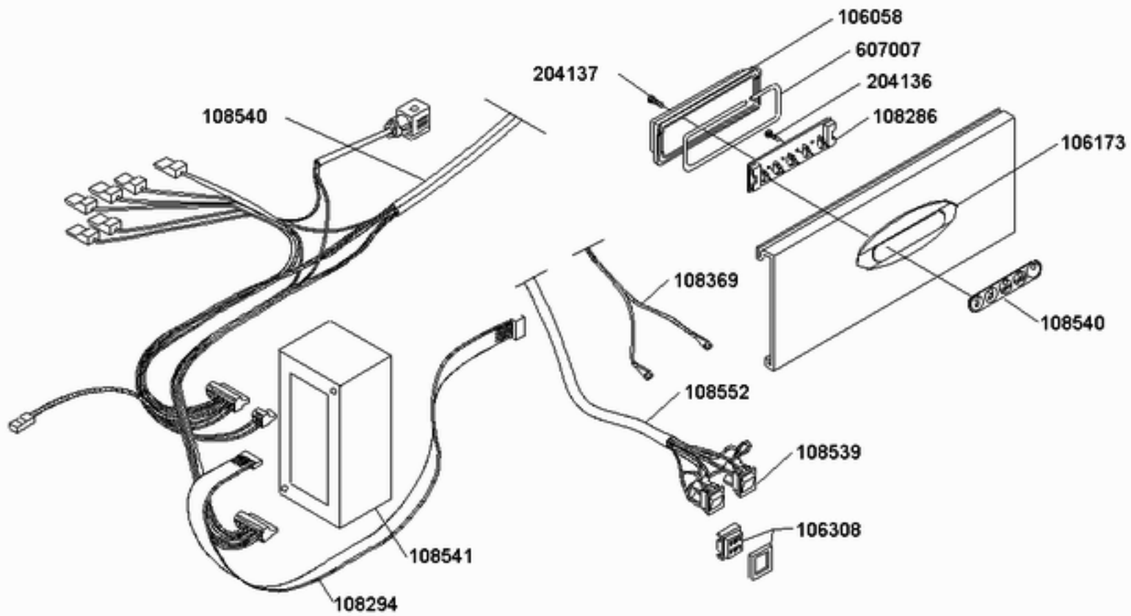
PRACTICAL 85 / E