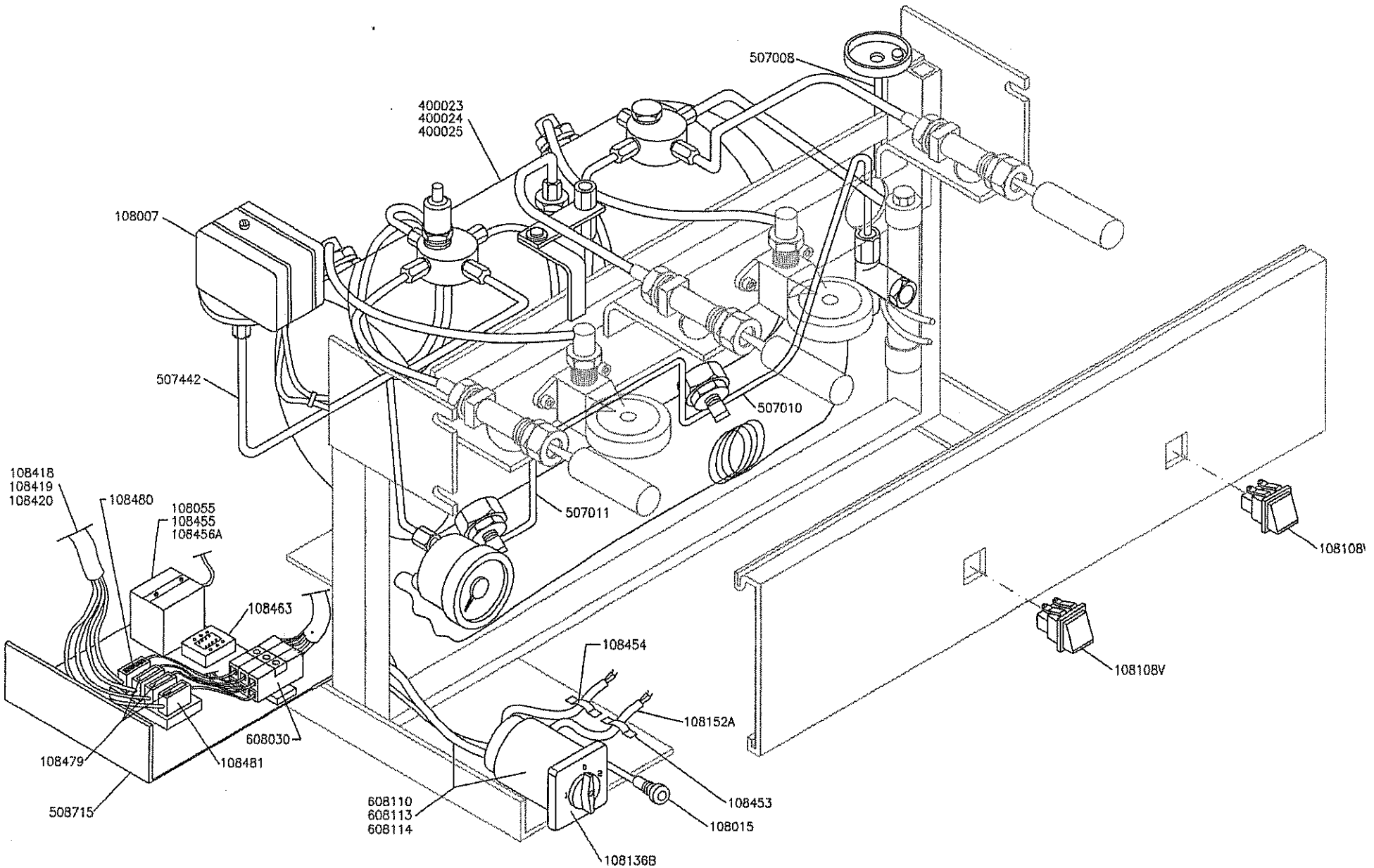
507008
400023
400024
400025
108007
507442
507010
507011
108418
108419
108420
108480
108055
108455
108456A
108463
108454
108152A
608030
108479
108481
508715
608110
608113
608114
108453
108015
108136B
108108V

| | | |
|---|---|---|
| 108007 | Pressostato per 85 | Pressure regulator 85 |
| 108015 | Lampada spia 230 V | Pilot lamp 230 V |
| 108055 | Centralina autolivello 230 V | Trigger box - autofill 230 V |
| 108108V | Pulsante "ON-OFF" verde | "ON-OFF" switch - green |
| 108136B | Interruttore generale 32 Amp. | General Switch 32 A |
| 108152A | Discesa pompa 85/95 | Pump cable 85/95 |
| 108418 | Cablaggio 12/21-2 gruppi | Cabling - 12/21-2 gr. |
| 108419 | Cablaggio 12/21-3 gruppi | Cabling - 12/21-3 gr. |
| 108420 | Cablaggio 12/21-4 gruppi | Cabling - 12/21-4 gr. |
| 108453 | Fermo cavo pompa | Fastener for pump cable |
| 108454 | Fermo cavo alimentazione | Fastener for supply cable |
| 108455 | Centralina autolivello 2/3 gruppi TÜV | Trigger box - autofill 2-3 gr TÜV |
| 108456A | Centralina autolivello 110 V | Trigger box - autofill 110 V |
| 108463 | Termostato di sicurezza | Security Thermostat |
| 108479 | Fusibile ad innesto da 0,5 Amp. | Clutch fuse 0,5 A |
| 108480 | Fusibile ad innesto da 5 Amp. | Clutch fuse 5 A |
| 108481 | Portafusibile a innesto | Clutch fuse holder |
| 400023 | Caldaia 85-12-2 gr. completa | Boiler-Complete 85-12-2 gr. |
| 400024 | Caldaia 85-12-3 gr. completa | Boiler-Complete 85-12-3 gr. |
| 400025 | Caldaia 85-12-4 gr. completa | Boiler-Complete 85-12-4 gr. |
| 507008 | Tubo scarico condensa | Discharge tube |
| 507010 | Tubo valv. rit.-iniett. 12/21-2/3/4 gr. | Tube check valve/injector 12/21-2/3/4 gr. |
| 507011 | Tubo collegamento iniettori 12/21 | Tube -injectors connection 12/21 |
| 507442 | Tubo caldaia-press. 85/95-Pract./2/3/4 gr. | Tube boiler-pressure regulator 85/95-Pract./2/3/4 gr. |
| 508715 | Box sost. imp. elett. 85 | Wiring box support 85 |
| 608030 | Morsettiera componibile | Terminal block |
| 608110 | Cablaggio int. gen. 32 Amp. 2/3/4 gr. | Cabling - general switch 32 A 2/3/4 gr. |
| 608113 | Cablaggio int. gen. 32 Amp. 2 gr. TÜV | Cabling - general switch 32 A 2 gr TÜV |
| 608114 | Cablaggio int. gen. 32 Amp. 3 gr. TÜV | Cabling - general swich 32 A 3 gr TÜV |