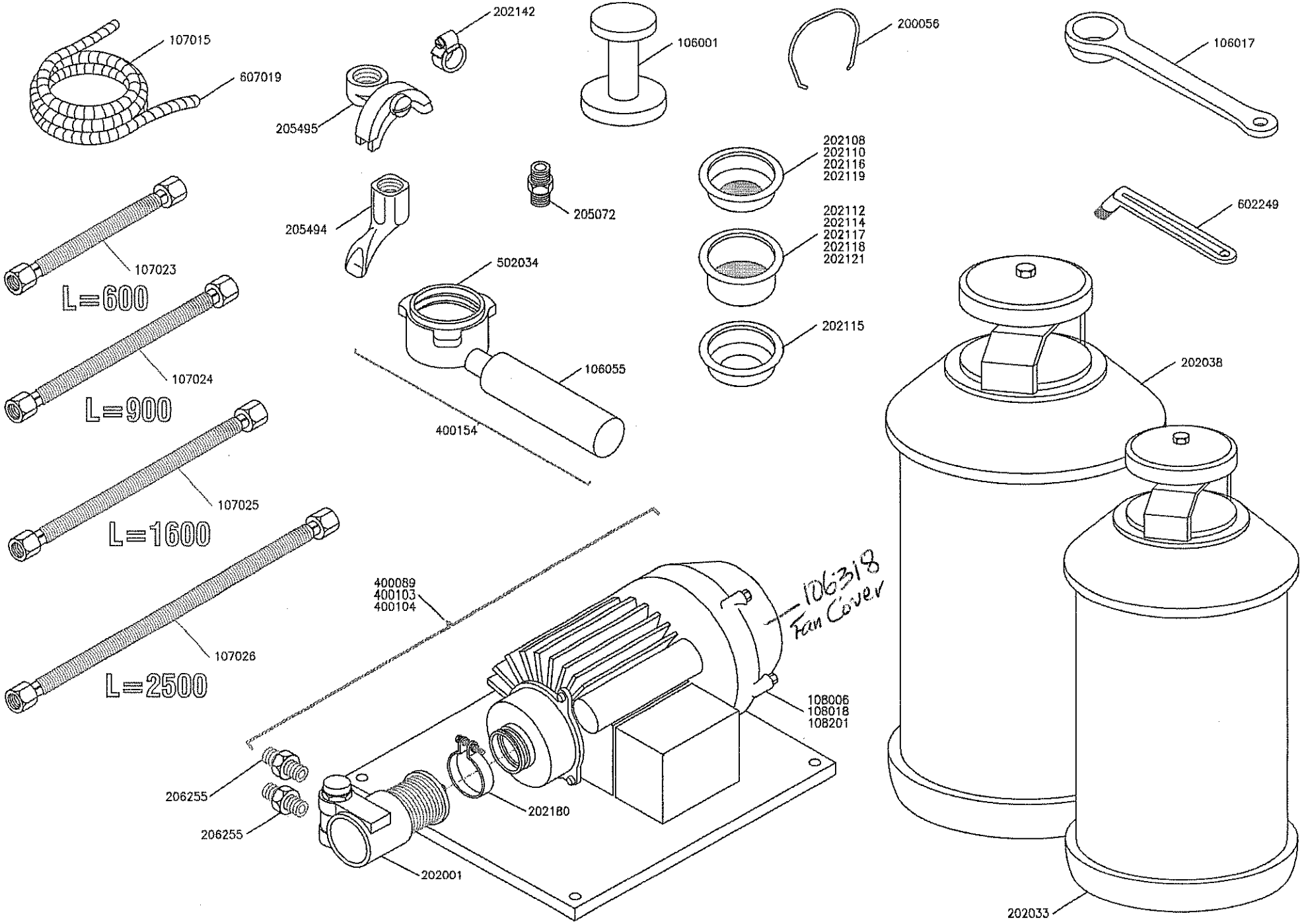
107015
607019
202142
205495
106001
200056
106017
202108
202110
202116
202119
205494
205072
602249
202112
202114
202117
202118
202121
107023
L=600
502034
202115
107024
L=900
106055
202038
400154
107025
L=1600
107026
L=2500
400089
400103
400104
106318
Fan Cover
108006
108018
108201
206255
206255
202180
202001
202033

106001	Pressacaffè	Hard tamper
106017	Misurino caffè	Coffee spoon
106055	Impugnatura coppa	Backelite handle
107015	Tubo gomma scarico al metro	Exhaust rubber hose (in meters)
107023	Tubo trecciato inox 600mm 3/8"F + 3/8"F	Stanless steel plaited rubber hose-600 mm3/8"F+3/8"F
107024	Tubo trecciato inox 900mm 3/8"F + 3/8"F	Stanless steel plaited rubber hose-900 mm3/8"F+3/8"F
107025	Tubo trecciato inox 1600mm 3/8"F + 3/8"F	Stanless steel plaited rubber hose-1600mm3/8"F+3/8"F
107026	Tubo trecciato inox 2500mm 3/8"F + 3/8"F	Stanless steel plaited rubber hose-2500mm3/8"F+3/8"F
108006	Motore per pompa 240 V	Engine for pump 240 V
108018	Motore per pompa 110 V	Engine for pump 110 V
108201	Motore per pompa 230 V	Engine for pump 230 V
200056	Anello fermafiltro	Filter basket clip
202001	Pompa volumetrica	Volumetric pump
202033	Depuratore medio lt. 8	Water softener Lt. 8
202038	Depuratore grande lt.12	Water softener Lt. 12
202108	Filtro 6 grammi	Filter 6 gr.
202110	Filtro 8 grammi	Filter 8 gr.
202112	Filtro 12 grammi	Filter 12 gr.
202114	Filtro 16 grammi	Filter 16 gr.
202115	Filtro cieco	Blind filter
202116	Filtro 7 grammi	Filter 7 gr.
202117	Filtro 14 grammi	Filter 14 gr.
202118	Filtro 21 grammi	Filter 21 gr.
202119	Filtro 9 grammi	Filter 9 gr.
202121	Filtro 18 grammi	Filter 18 gr.
202142	Fascetta fissaggio tubo scarico	Exhaust pipe clamp
202180	Fascetta per motore-pompa	Hose clamp for motor pump
205072	Nipplo 3/8"x3/8" foro 10	Nipple 3/8"x3/8" ø 10
205494	Beccuccio a 1 via	Single spout
205495	Beccuccio a 2 vie	Double spout
206255	Nipplo per pompa	Nipple for pump
400089	Pompa + motore 230 V completo	Pump + engine 230 V complete
400103	Pompa + motore 110 V completo	Pump + engine 110 V complete
400104	Pompa + motore 240 V completo	Pump + engine 240 V complete
400154	Coppa completa	Complete cup
502034	Coppa portafiltro	Filter holding cup
602249	Spazzolino per pulizia doccia	Brush for gutter cleaning
607019	Gomma scarico 1,5 mt.	Exhaust rubber hose (pieces of 1,5 meters each)
	RICAMBI PER DEPURATORE 8 -12 LITRI	SPARE PARTS FOR WATER SOFTENER -8/12 LITRES
800013	Filtro superiore	Upper filter
800014	Filtro inferiore	Lower filter
800015	Tappo	Plug
800016	Resine al LT.	Resins (in liters)
800033	Ferro ad "U"	"U" iron
800041	Gigleur	Gigleur
800044	Leva per rubinetto	Lever for valve
800060	OR per rubinetto	Seal O-ring for valve
800061	OR per tappo	Seal O-ring for plug
800063	Manopola tappo	Plug grip
800113	Rubinetto depuratore presa 3/8"	Water softener walve-intake 3/8"